NOP Coolant Unit

（E- Series　ET）

User’s Instruction Manual

Trochoid type
Medium-pressure coolant unit

Important

Read this manual thoroughly and carefully before installing or selecting a pump.

Follow all instructions carefully to ensure the correct and efficient installation and operation of the pump.

This manual contains recommendations and instructions on pump selection, installation, operation, and troubleshooting.

Failure to observe this manual prior to operation may result in personal injury and/or equipment damage.

Store this manual in a safe place for reference.

NOP™

Nippon Oil Pump Co., Ltd.

A1TE201805

User's Instruction Manual
for NOP Coolant Unit E-Series ET

＜Contents＞

For safe operation 3
Safety precautions 7
●Safety devices 7
●Safety measures 7
Model Numbering System 8
Pump installation 8
●Place of installation 8
●Space required for installation. 10
●Recommended installation circuit. 10
Position of pump inlet port 10
Filters 11
●Performance of built-in filter. 11
Contaminant drain port 12
Outlet port 13
Piping for the pump 14
●Torque applied on pipe connection 14
●Connecting the pipes 14
●Pipes and pipe joints 14
Electric wiring 15
For operation 15
●Start-up checklist 15
●Cautions for trial run 15
Inspections 16
●Daily startup inspections 16
●Periodical inspections 16
Storage 16
Warranty 17
For selecting a pump 17
●Operating method 17
●Required flow rate 17
●Required pressure 17
●Relief valve pressure setting 17
●Selecting a pumped liquid. 18
●Operating ambient temperatures 18
●Temperature range of the pumped liquid 18
●Viscosity range of the pumped liquid 18

●Compatible work materials. 19
For selecting a motor 19
●Required power for the pump. 19
●Voltage and frequency. 19
Suction performance 20
Internal construction 20
Troubleshooting guide 21
Backwashing 22

For safe operation

Be sure to understand the safety countermeasures and strictly follow the precautions, and operating instructions stated in this manual for safe operation.
When you see the following symbols and titles in this manual, be alert to the potential for personal injury or property damage.

This manual uses the following symbols and titles to identify the risk and danger levels.

⚠ **Danger:**	Failure to follow instructions will result in death or serious personal injury.
⚠ **Warning:**	Failure to follow instructions can result in death or personal injury.
⚠ **Caution:**	Failure to follow instructions can result in personal injury or pump and other equipment damage.

⚠ **Danger**
Do not operate the pump in a place having a risk of explosion or a place with highly concentrated dust. Do not place a flammable liquid or article around the motor. It may cause an explosion or fire.
Make sure that the power is disconnected before installing a pump, performing maintenance work or inspections to avoid the risk of electric shock.
Transporting, installation, plumbing, wiring, operation, or maintenance work must be performed by personnel specifically knowledgeable in the respective task, and any legally regulated work must be performed by personnel properly qualified under the related law.

⚠ **Warning**
Getting your fingers, hands or articles caught in parts of the drivetrain may cause unexpected injury.
Heat will build up in the motor and pump while in operation. Contact with hand may cause burns.
Ensure the power is disconnected prior to do any wiring work. Also take measures to avoid accidental power-on.
Connect the motor in accordance with the motor wiring diagram or the User's Instruction Manual to prevent fire and electrical shock.
Ground the equipment properly to prevent fire and electrical shocks due to electrical leakage.
The pump cannot be used for gasoline and other volatile liquids. They may cause an explosion or fire.
Pumping high temperature liquid may result in personal burns from a damaged pump or leaked liquid.

⚠ Caution
Failure to install “ground fault interrupter” (GFI) or overload protection device may cause damage to the equipment or motor burnout.
NOP coolant unit is limited to indoor use only.
Make sure to use the predefined parts of suspension fittings whenever you lift the pump up. Check the position of suspension fittings from the drawing.
Mounting pump in a wrong orientation will damage the motor. Install the pump unit in an upright position.
Mounting on an uneven surface or forced installation into misaligned mounting holes may damage the pump.
Do not install in locations where pump may suck tramp oil on the liquid surface or foam is generated. Installation in such locations may cause a significant loss in turbulence™ filter performance and cavitation which damages the pump.
A pre-filtration device such as a plate (screen-type) filter must be inserted to remove the large objects prior to the pump inlet. The recommended filter mesh size is 18 (about 1mm sieve size).
Suction of excessive amount of needle-like or wool-like swarf, which smaller than 3 mm, may even cause inlet port or turbulence filter clogging.
If in-line filter is to be installed in the outlet line, it must be washed regularly. Continuous use of clogged filters may result in abnormal noise, vibration, inadequate discharge, and damage to the pump.
Suction of tramp oil or foam in the liquid will impair turbulence filter performance. Insert a partition, for example, to prevent the pump from sucking tramp oil or foam.
Pipes connected to the contaminant drain port must be as large as the port diameter. Also make sure that piping of contaminant drain line is no higher than 1 meter from the tank bottom vertically, and no longer than 3 meters horizontally. The piping layout should be as short and straight as possible and with as few bends as possible(Use of PVC pipe is recommended). Failure to follow and apply will result in discharge failure and may lead to pipe clogging or pump damage.
Inspect all valves, cocks, joints and the like before installation. Avoid using any component that has a small port or a cavity in the casting. Failure to follow and apply will result in contaminant discharge failure and may cause pipe clogging or pump damage.
Do not restrict the flow to 20 ℓ/ min or lower. Excessive flow restriction may decrease the performance of turbulence filter and damage the pump.
If a valve is to be inserted in the contaminant drain line, select a gate type. A ball type will reduce the port diameter and may result in contaminant discharge failure and damage the pump.
If releasing a contaminant drain port in open atmosphere, air may be trapped into the pump immediately after the pump operation stops. Once the operation resumes, it may cause a delay in coolant discharge and produce noise. So take measures to prevent suction of air, such as submerging the pipes below the tank liquid level. (See Fig.7, P.13)
Pump can make a louder noise at the first run, and the noise continues until the trapped air in the contaminant drain port is fully released. It is a normal operation sound, and will disappear as air goes out.

⚠ Caution
Be sure to avoid setting up the contaminant drain pipe (hose) in locations where the dirty coolant coming through the contaminant drain pipe may cause impact on pump suction (such as suction of foam). Suction of foam may cause noise, pump damage and reduce the outlet pressure.
Tightening pipes above the specified torque value (listed in Table 3) may cause a damage to the port.
Excessive use of thread-sealant tape on pipe thread or use of a liquid type sealant will reduce the friction resistance and may result in over-torque and damaging the port.
Incomplete flushing may result in the pump and connecting equipment failure.
Do not attempt to flush out the pipes after connecting to the pump.
Test the pipes for air tightness before installing the pump.
Reverse pump rotation may cause liquid leaks or damage to the pump.
Never run the pump dry for 10 seconds or longer. If pump fails to prime, stop the motor.
If pump will not discharge on initial run, perform air bleeding in the outlet line.
Make sure to perform air bleeding if a check valve of which the pressure resistance is above 0.05 MPa is installed in the outlet line. No coolant may be discharged till the trapped air is fully released.
If an abnormal phenomenon is observed, stop the pump immediately and check for the defective areas. (See Table 4, P.21)
If pump runs over the maximum-use pressure while in operation, lower the relief pressure setting or provide by-passing circuit to avoid over-pressurization. Running pump over the maximum use pressure may cause motor burnout or damage to the pump.
Do not remove the return pipe, or it may cause foam and abnormal sounds.
Use of liquid which doesn't offer lubricity, rust protection (such as tap water) or contains corrosive substances will damage the pump. Use water-soluble coolant or straight oils of 32 mm^2/s or less viscosity(When 50μm element is used)
The seals of NOP coolant unit are made of fluoro carbon rubber. Check in advance with the liquid manufacturer (or distributor) for the compatibility with the material of seals. Use of incompatible liquid will cause liquid leakage.
Operation over the range specified in this manual may cause motor burnout, pump damage and severe accident. It can also significantly shorten the pump life-time and cause a performance loss or liquid leakage.
Pumped liquid must be under the specified viscosity range as follows (Up to15 mm^2 /sec when 20μm element is used, up to32 mm^2 when 50μm element is used) Use of highly viscous liquid may cause turbulence filter clogging or overloading, resulting in pump damage and motor burnout.
Use of work materials harder than HV 300, such as Inconel, Titanium alloys, Tungsten alloys, may shorten the pump life significantly, and result in pump performance decrease or liquid leakage.
Use of work materials containing Si of over 6 %, such as Aluminum Die Cast(ADC) or , Ductile iron, may shorten the pump life-time significantly, and result in pump performance decrease or liquid leakage.
Use of work materials, such as special hardened steel, carbon fiber, glass fiber containing materials, carbon materials, may shorten the pump life-time significantly, and result in pump performance decrease or liquid leakage.
Applying a wrong supply voltage or frequency may result in motor burnout or abnormal pressure and flow rate.

⚠ **Caution**
Operation at a slow speed (1000 min^{-1} or less) or a high speed (2000 mm^{-1} or greater) may cause pump malfunction.
The excess resistance in the outlet line will reduce the suction performance.
Entry of air into the inlet port will cause cavitation inside pump which damages the pump or reduces the turbulence filter performance and the element may get clogged as a result.
Inlet port cleaning must be performed on a regular basis, continuous use of clogged inlet will cause abnormal noise, vibration, discharge failure, which result in the pump damage
Backwashing will not recover filtration performance of a pump completely. Constant filter clogging suggests the possibility of operating the pump beyond the specifications. In particular, be careful not to allow tramp oil and foam to be mixed in the coolant tank.

Safety precautions

●Safety devices

・Install "ground fault interrupter"(GFI) or overload protection device on the motor power source without fail.
・Check the motor nameplate for the ratings, and set up and operate the motor within the specified ratings.
・Follow all the technical standards applicable to electrical facilities.

> ⚠ **Caution:** Failure to install "ground fault interrupter" (GFI) or overload protection device may cause damage to the equipment or motor burnout.

・To avoid pump damage, install a flow monitor, pressure sensor, or such other devices in the pump's outlet line to detect dry running.
・The oil seals and packings are not usable perpetually.
・Install the pump in a safe location, or provide an protective cover or device that accidental oil leakage would not cause personal injury or equipment damage.

●Safety measures

・Keep children or other people incapable of judging risks away from the pumps.
・Furnish a protective cover or device over the drive section to prevent your fingers, hands, or other articles from getting trapped into the section.

> ⚠ **Warning:** Getting your fingers, hands or articles caught in parts of the drivetrain may cause unexpected injury.

・Do not contact a pump or motor during the operation, or immediately after the operation stops.

> ⚠ **Warning:** Heat will build up in the motor and pump while in operation. Contact with hand may cause burns.

> ⚠ **Danger:** Do not operate the pump in a place having a risk of explosion or a place with highly concentrated dust. Do not place a flammable liquid or article around the motor. It may cause an explosion or fire.

Model Numbering System

■Model Numbering System

TOP-YTH①②－③EVD④⑤

① Motor capacity	750:0.75 kW	
	1500:1.5 kW	
② Motor type*1	Standard motor	A3: AC 200/200/220/230 V 50/60/60/60 Hz 3 phase electric induction motor (IE3) with CE marking
	Local motor	AE: supplied by NOP Deutschland (Germany) AF: supplied by NOP Taiwan AJ: supplied by NOP Asia (China) AK: supplied by NOP India
③ Rotor capacity	T208: Trochoid™ pump, 8 cc/rev	
	T216: Trochoid™ pump, 16 cc/rev	

Filtering method	E: Turbulence™ filter type
Relief valve	VD: External return type
④ Relief pressure setting	20 : 2.0 Mpa*2
	15 : 1.5 Mpa
⑤ Filtering performance (Nominal value)	B : 50 μm (for spindle oil coolant)
	C : 20 μm

*1 For further details about the local motor, please contact to our overseas branch or subsidiaries.

*2 Maximum pressure of ET208 is 1.5 MPa.

Pump installation

●Place of installation

⚠ **Caution:** NOP coolant unit is limited to indoor use only.

⚠ **Caution:** Make sure to use the predefined parts of suspension fittings whenever you lift the pump up. Check the position of suspension fittings from the drawing.

⚠ **Caution:** Mounting pump in a wrong orientation will damage the motor. Install the pump unit in an upright position.

⚠ **Caution:** Mounting on an uneven surface or forced installation into misaligned mounting holes may damage the pump.

⚠ **Caution:** Do not install in locations where pump may suck tramp oil on the liquid surface or foam is generated. Installation in such locations may cause a significant loss in turbulence™ filter performance and cavitation which damages the pump.

Figure 1: Pump mounting hole pattern

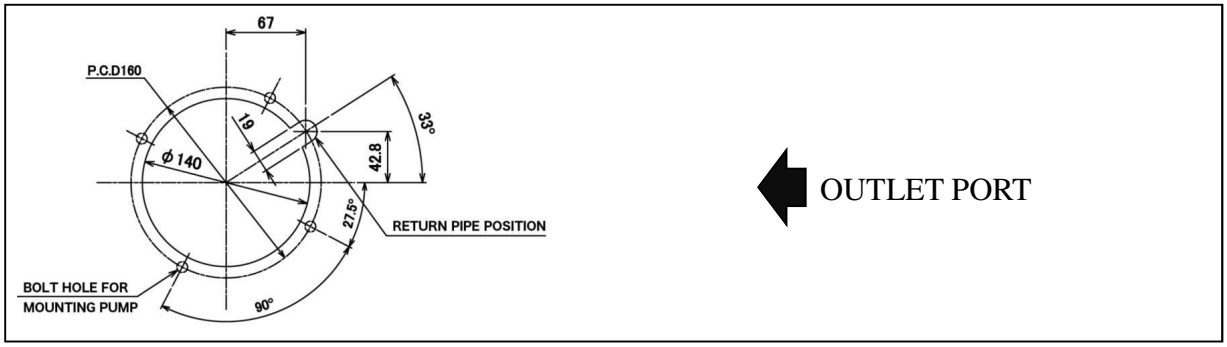

Figure 2: Dimensional drawing (Typical / Motor type: A3)

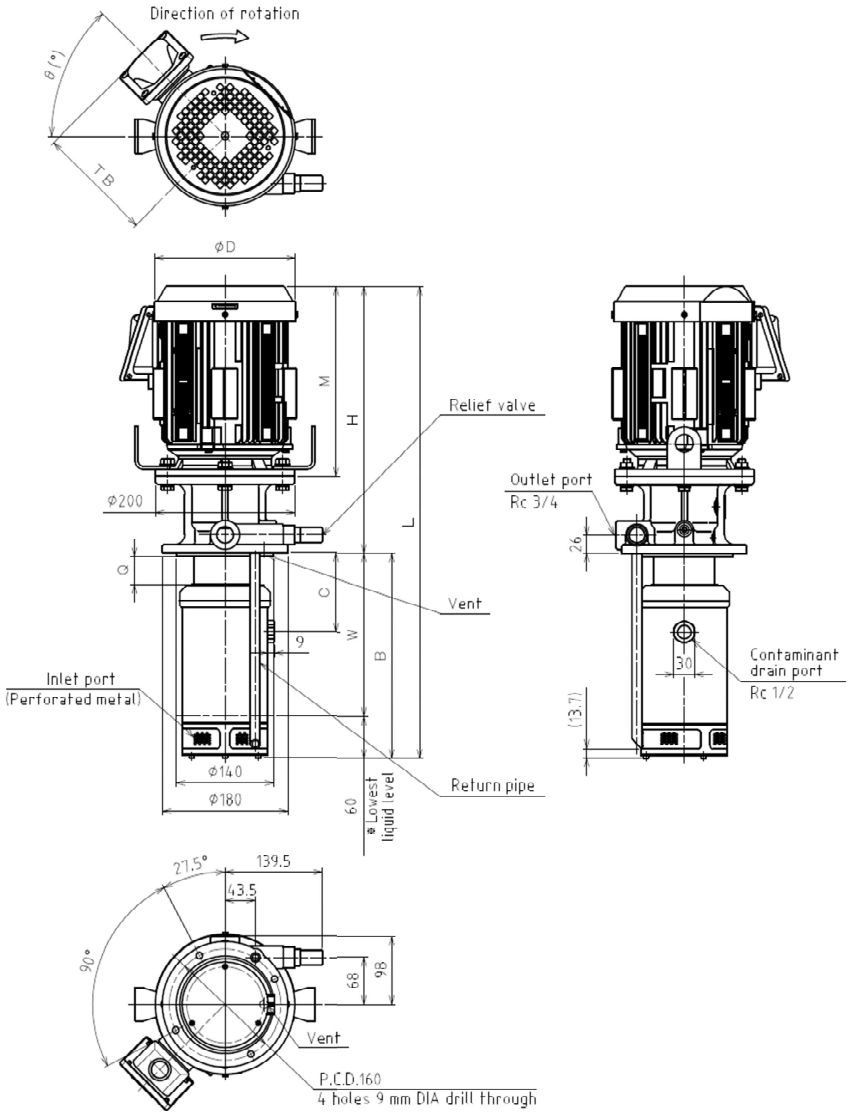

Model	L	B	C	W	Q	H	M	ΦD	θ(°)	TB
YTH750A3−T208EVD＊＊	638.8	274.8	93.5	214.8	20	364	253.5	170	30	151
YTH1500A3−T216EVD＊＊	678.3	294.8	113.5	234.8	40	383.5	273	202	45	168

Model	Motor capacity (kW)	Flow rate (L/min) 50Hz／60Hz	Maximum pressure (MPa) 50Hz／60Hz	Approximate weight (kg)
YTH750A3−T208EVD＊＊	0.75	12.0／14.4	1.5／1.5	34
YTH1500A3−T216EVD＊＊	1.5	24.0／28.8	2.0／2.0	39

Figure 3: Required clearances around the pump

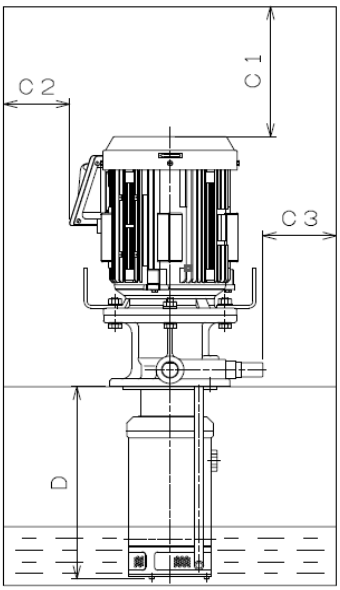

	Dimensions
C1	>D＋30 mm
C2	>200 mm
C3	>50 mm
D	Pump height below the top of tank

●Space required for installation.

Do not operate NOP coolant unit in a dusty, extremely high, or low temperatures environment(See page P.18 for the operating ambient temperatures.).
It is recommended to provide minimum clearances as illustrated by figure 3 for easy maintenance.

●Recommended installation circuit.

For safe and efficient operation on NOP coolant unit, it is recommended to nstall a circuit as illustrated below, <u>in particular, piping for air-bleeding in the pump's outlet line.</u>

Figure 4: Recommended air bleeding circuit

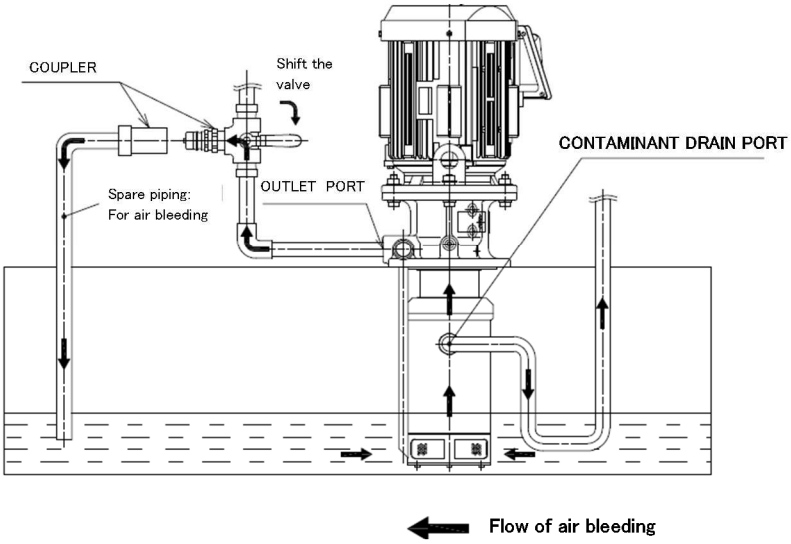

Position of pump inlet port

Figure 5: Gap under the bottom of pump

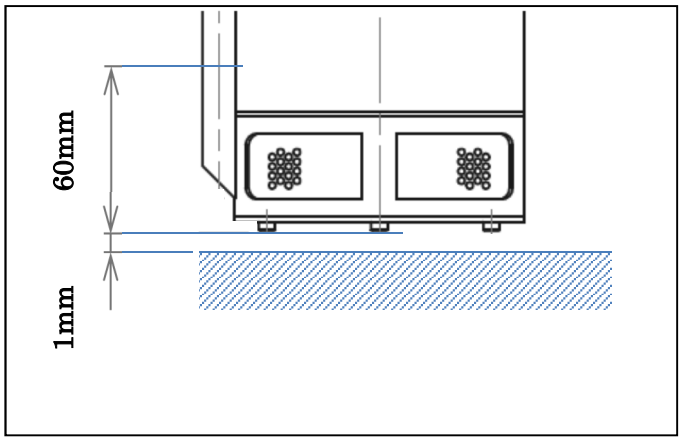

Pump is to be mounted in the tank maintained more than 1 mm from the tank bottom.
If sediments of sludge, chip or other material larger than 3mm would accumulate at the tank bottom, provide a sufficient clearance to prevent the pump from sucking the sediments.
The pump must be at least more than 60 mm below the liquid level while the pump is running. Being installed no deeper than 60 mm will allow air to be drawn into the pump, resulting in abnormal noise, impairing turbulence filter

performance and pressure drop, and the pump will be damaged.

Filters

⚠ **Caution:** A pre-filtration device such as a plate (screen-type) filter must be inserted to remove the large objects prior to the pump inlet.
The recommended filter mesh size is 18 (about 1mm sieve size).

All foreign objects larger than the perforations of the inlet port must be pre-filtered.
If higher filtration accuracy than shown in Table 1 above is required, install in-line filter in the outlet line.

●Performance of built-in filter.

Table 1 : Filtering performance

Inlet port	3mm (Solids larger than 3mm must be removed from the tank.)
Filter (Nominal value)	20 μm 50 μm (Selected at time of purchase) *50 μm filter is the only option for using straight oil.

⚠ **Caution:** Suction of excessive amount of needle-like or wool-like swarf, which smaller than 3 mm, may even cause inlet port or turbulence filter clogging.

⚠ **Caution:** If in-line filter is to be installed in the outlet line, it must be washed regularly. Continuous use of clogged filters may result in abnormal noise, vibration, inadequate discharge, and damage to the pump.

⚠ **Caution:** Suction of tramp oil or foam in the liquid will impair turbulence filter performance. Insert a partition, for example, to prevent the pump from sucking tramp oil or foam.

Figure 6 : Method for preventing the suction of tramp oil

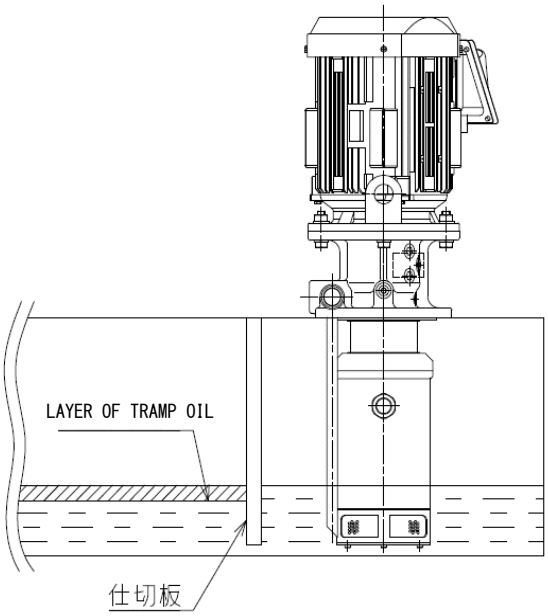

PARTITION

Contaminant drain port

・After being separated by a turbulence filter, dirty coolant which contains contaminant will be discharged through the contaminant drain line.
・Filtering the dirty liquid discharged through the contaminant drain line will help maintain the liquid in the tank clean

Table 2: Contaminant drain port performance (for reference only)*

Discharge rate	30～40 ℓ/min
Discharge pressure	0.02 MPa

*These values are for reference only and not for guaranteeing the performance.

⚠ **Caution:** Pipes connected to the contaminant drain port must be as large as the port diameter. Also make sure that piping of contaminant drain line is no higher than 1 meter from the tank bottom vertically, and no longer than 3 meters horizontally. The piping layout should be as short and straight as possible and with as few bends as possible (Use of PVC pipe is recommended). Failure to follow and apply will result in discharge failure and may lead to pipe clogging or pump damage.

⚠ **Caution:** Inspect all valves, cocks, joints and the like before installation. Avoid using any component that has a small port or a cavity in the casting. Failure to follow and apply will result in contaminant discharge failure and may cause pipe clogging or pump damage.

⚠ **Caution:** Do not restrict the flow to 20 ℓ/ min or lower. Excessive flow restriction may decrease the performance of turbulence filter and damage the pump.

⚠ **Caution:** If a valve is to be inserted in the contaminant drain line, select a gate type. A ball type will reduce the port diameter and may result in contaminant discharge failure and damage the pump.

⚠ **Caution:** If releasing a contaminant drain port in open atmosphere, air may be trapped into the pump immediately after the pump operation stops. Once the operation resumes, it may cause a delay in coolant discharge and produce noise. So take measures to prevent suction of air, such as submerging the pipes below the tank liquid level.
(See Fig. 7, on the next page as an example)

Figure 7. Recommended piping layout for preventing pump air trapping.

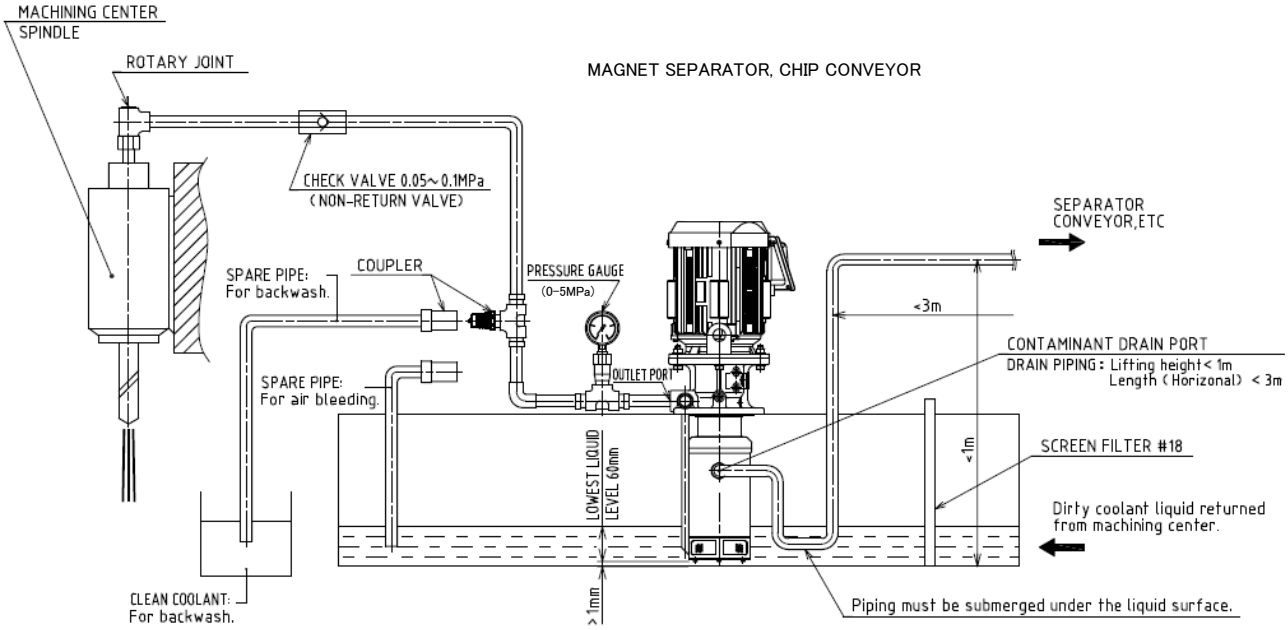

⚠ **Caution:** Pump can make a louder noise at the first run, and the noise continues until the trapped air in the contaminant drain port is fully released. It is a normal operation sound, and will disappear as air goes out.

⚠ **Caution:** Be sure to avoid setting up the contaminant drain pipe (hose) in locations where the dirty coolant coming through the contaminant drain line may cause impact on pump suction (such as suction of foam) . Suction of foam may cause noise, pump damage and reduce the outlet pressure.

Outlet port

- The Pipes connected to the outlet port must be as large as the port diameter and pressure resistant type.
- Install a check valve in the outlet line near the port to reduce a time lag from motor start-up to liquid discharge and prevent rust inside the pump.
- Pump and pipes must be filled with liquid at all times.

Piping for the pump

●Torque applied on pipe connection

The maximum torques permissible for pipe connections to NOP coolant unit are given in the table that follows:

Table 3: Maximum permissible torque by the pipe size

Pipe size, Rc	1/2"	3/4"
Torque N·m	25	30

⚠ **Caution:** Tightening pipes above the specified torque value (listed in Table 3) may cause damage to the port.

⚠ **Caution:** Excessive use of thread-sealant tape on pipe thread or use of a liquid type sealant will reduce the friction resistance and may result in over-torque and damaging the port.

●Connecting the pipes

- To prevent leaks and air entry, make sure all pipe connections are securely and completely airtight,
- Be sure to install pipe-supporting equipment to keep the weight of pipes off the pump.
- During pipe-working, check the pipe lengths and angles carefully to prevent exertion of undue force on the pump by the pipes.
- Installation of a pressure gauge in the outlet line is recommended to monitor the pump operation.
- Installation of a stop valve, union joints, and such other fittings are also recommended for easy maintenance.
- Some high-pressure hoses may have a smaller inside diameter. Check the hoses not only for outside diameter but also for inside diameter as well before use.
- Installation of an air vent valve in the outlet line is recommended to prevent possible startup troubles.

●Pipes and pipe joints

- All pipes must be cleaned thoroughly before connected to the pump. Some pipes may have dust from storage or threading chips remaining inside. Be sure to flush out all pipes to ensure that they are thoroughly clean before use.

⚠ **Caution:** Incomplete flushing may result in the pump and connecting equipment failure.

⚠ **Caution:** Do not attempt to flush out the pipes after connecting to the pump.

⚠ **Caution:** Test the pipes for air tightness before installing the pump.

Electric wiring

Electric wiring must be carried out by qualified personnel.

⚠ **Warning:** Ensure the power is disconnected prior to do any wiring work.
Also take measures to avoid accidental power-on.

⚠ **Warning:** Connect the motor in accordance with the motor wiring diagram or the User's Instruction Manual to prevent fire and electrical shock.

⚠ **Warning:** Ground the equipment properly to prevent fire and electrical shocks from electrical leakage.

・Check the direction of the factory-installed motor rotation indicated on the nameplate which is attached to the motor frame or terminal box. Connect the motor accordingly.

(The factory-installed special motor (a 3-phase type) is, when the pump is viewed from the suction side, designed to rotate in counter-clockwise if wired as illustrated in the figure 8.)

Figure 8: Motor wiring diagram

For operation

●Start-up checklist

・Is the tank filled with liquid up to, or over the specified level? (See Fig.5, P10)
・Are the inlet, outlet and drain ports unblocked?
・Check for loose pipe connections.
・On the initial startup, turn the pump on and off quickly to confirm that the motor is running in the correct direction.

⚠ **Caution:** Reverse pump rotation may cause liquid leaks or damage to the pump.

●Cautions for trial run

⚠ **Caution:** Never run the pump dry for 10 seconds or longer.
If pump fails to prime, stop the motor.

⚠ **Caution:** If pump will not discharge on initial run, perform air bleeding in the outlet line

⚠ **Caution:** Make sure to perform air bleeding if a check valve of which the pressure resistance is above 0.05 MPa is installed in the outlet line.
No coolant may be discharged till the trapped air is fully released.

Inspections

●Daily startup inspections

Check for liquid leakage, abnormal sound, and heating.

> ⚠ **Warning:** If an abnormal phenomenon is observed, stop the pump immediately and check for the defective areas. (See Table 4, P.21)

Periodical inspections

・Periodical inspection must be performed at least once a year.

<Periodical inspection check items>

・Outlet flow rate, pressure
・Flow rate of contaminant drain port (guideline: 20 L/min, minimum)
・Clogging of contaminant drain port
・Clogging of the inlet port (perforated metal)
・Leaks from pipe connecting parts
・Liquid level inside the tank (The level that would not allow pump to draw air)
・Amount of contaminant inside the tank (It is recommended to do the tank cleaning once in a half year)
・Concentration level of the liquid (Within the range which the manufacturer recommends)
・Viscosity of straight oil (Within 32mm^2/s if using 50μm element)
・Liquid temperature (-5℃～60℃)
・Over-heating of pump motor

Storage

・Customers are recommended to keep spare parts in stock (pumps motors and coupling) to avoid operational problems caused by an unexpected trouble or performance deterioration due to aging.
・Be sure to schedule and perform a periodical inspection. (See “Periodical inspection”, P.16).
・If a pump is to be stored for an extended period of time, protect the pump against the internal rust by pumping lubricating oil of 15 mm^2/s or less viscosity for three minutes to wet inside the pump. Put lids on the ports, wrap the unit in a vinyl bag, sealed it air tight and store. If storing for six months or longer, check for exterior rust and free rotation once a month.
・If a pump has to be restarted after the long-term storage check it out for unusual noise, heating, and other abnormalities on its first run. Stop operation immediately when any of these mentioned above occurs.

> ⚠ **Danger:** Make sure that the power is disconnected before installing a pump, performing maintenance work or inspections to avoid the risk of electric shock.

Warranty

- The term of warranty is for **one year after the delivery to customer's designated location, or 5000 hours of operation, whichever occurs first**.
- The warranty does not cover troubles resulting from operation beyond the specifications or other external causes.
- The product warranty is applicable only to operation within the product specifications and in accordance with this User's Instruction Manual.
- The warranty does not cover, and consequently we will not be responsible for, any disassembly, alteration made to a product by the customer.
- The warranty will not cover pump troubles arising out of any causes which are not the responsibilities of, or are not attributable to Nippon Oil Pump Co., Ltd., including disasters and the troubles caused by other than the subject pump.
- The warranty covers the particular product as delivered. We are not responsible in anyway whatsoever for secondary loss arising out of a problem with a product that we have delivered.

For selecting a pump

●Operating method

- E-series pump is most suitable for intermittent operation. Please check operating method. Continuous operation is also permitted.

●Required flow rate

- Check your requirements in accordance with the catalogs, drawings, or other materials.
- The discharge rate is subject to the type, temperature, and pressure of the liquid,
- Selecting with an adequate margin of outlet pressure and flow rate is recommended.

●Required pressure

- Check your requirements in accordance with the catalogs, drawings and other material.

  Note: The pump must be run within the maximum pump operating pressure and the motor output rating.

●Relief valve pressure setting

- The relief valve is to be set at the cracking pressure.

  Notes: The relief valve setting must be within the maximum pump operating pressure and the motor output rating.
  The "cracking pressure" is the pressure point where you could observe that with the pressure built up inside the circuit, the valve starts to open and the coolant comes out.

⚠ **Caution:**	If pump runs over the maximum-use pressure while in operation, lower the relief pressure setting or provide by-passing circuit to avoid over-pressurization. Running pump over the maximum use pressure may cause motor burnout or damage to the pump.

⚠ **Caution:**	Do not remove the return pipe, or it may cause foam and abnormal sounds.

●Selecting a pumped liquid.

・A pumped liquid is limited to a water-soluble coolant, or straight oils of 32 mm^2/s or less viscosity(When 50μm element is used).

⚠ **Caution:** Use of liquid which doesn't offer lubricity, rust protection (such as tap water) or contains corrosive substances will damage the pump.
Use water-soluble coolant or straight oils of 32 mm^2/s or less viscosity (When 50μm element is used)

⚠ **Caution:** The seals of NOP coolant unit are made of fluoro carbon rubber.
Check in advance with the liquid manufacturer (or distributor) for the compatibility with the material of the seals.
Use of incompatible liquid will cause liquid leakage.

⚠ **Warning:** The pump cannot be used for volatile liquids like gasoline, nor fuel oils like kerosene. They may explode or cause fire.

●Operating ambient temperatures

・The permissible ambient temperature range is between -10℃ and 40℃.

⚠ **Caution:** Operation over the range specified in the foregoing may cause motor burnout, pump damage and severe accident. It can also significantly shorten the pump life-time and cause a performance loss or liquid leakage.

●Temperature range of the pumped liquid

・The permissible temperature range of the pumped liquid is between -5℃ and 60℃.
・When start-up, keep the temperature gap between the liquid and ambient temperature within 40℃.

⚠ **Warning:** Pumping high temperature liquid may result in personal burns from a damaged pump or leaked liquid.

●Viscosity range of the pumped liquid

The permissible viscosity range of the pumped liquid is below 15 mm^2 /sec.
(up to 32 mm^2 when 50μm element is used)

⚠ **Caution:** Pumped liquid must be under the specified viscosity range as follows (Up to15 mm^2 /sec when 20μm element is used, up to32 mm^2 when 50μm element is used)Use of highly viscous liquid may cause turbulence filter clogging or overloading, resulting in pump damage and motor burnout.

・A lower viscosity will reduce volumetric efficiency (discharge will be reduced).
・Use of a liquid beyond the specified viscosity range (15mm^2/s) may cause a pump damage or motor burnout due to a clogging of turbulence filter or over-loading.

Note: Control a liquid temperature on assumption that viscosity may rise significantly under the winter low temperature.

●Compatible work materials.

・Maximum permissible hardness of work materials is within HV 300

⚠ **Caution:**	Use of work materials harder than HV 300, such as Inconel, Titan, Tungsten, may shorten the pump life-time significantly, and result in pump performance decrease or liquid leakage.

⚠ **Caution:**	Use of work materials containing Si of over 6 %, such as Aluminum Die Cast(ADC), Ductile, may shorten the pump life-time significantly, and result in pump performance decrease or liquid leakage.

⚠ **Caution:**	Use of work materials, such as hardened steel, carbon fiber, glass fiber containing materials, carbon materials, may shorten the pump life-time significantly, and result in pump performance decrease or liquid leakage.

⚠ **Caution:**	Use of materials, such as coating film, resin may not just cause a significant loss in filtration performance but also clog the element.

⚠ **Caution:**	Running pumps in the tank liquid which contains a large amount of grindstones or abrasive grains may shorten the pump life-time significantly, and result in pump performance decrease or liquid leakage.

For selecting a motor

●Required power for the pump.

・Select a pump with an adequate margin with reference to the performance carve in the catalog.

・The power required by a pump is subject to the pressure, flow rate and the viscosity of the liquid.

・A liquid with higher viscosity requires a greater power.

Note: Select motor on the assumption that viscosity may rise significantly in the winter low temperature.

●Voltage and frequency.

⚠ **Caution:**	Applying a wrong supply voltage or frequency may result in motor burnout or abnormal pressure and flow rate.

⚠ **Caution:**	Operation at a slow speed (1000 min^{-1} or less) or a high speed (2000 mm^{-1} or greater) may cause pump malfunction.

Suction performance

NOP coolant unit is a self-priming pump, yet its performance will be reduced by the resistance in the inlet area or suction of air. Be careful with the tank liquid surface level and clogging of the inlet port (Perforated metals).

⚠ **Caution:** The excess resistance in the outlet line will impair the suction performance.

⚠ **Caution:** Entry of air into the inlet port will cause cavitation inside pump which damages the pump or decreases the turbulence filter performance and the element may get clogged as a result.

⚠ **Caution:** Inlet port cleaning must be performed on a regular basis, continuous use of clogged inlet will cause abnormal noise, vibration, discharge failure, which result in the pump damage

Internal construction

Figure 9 : Names of pump part

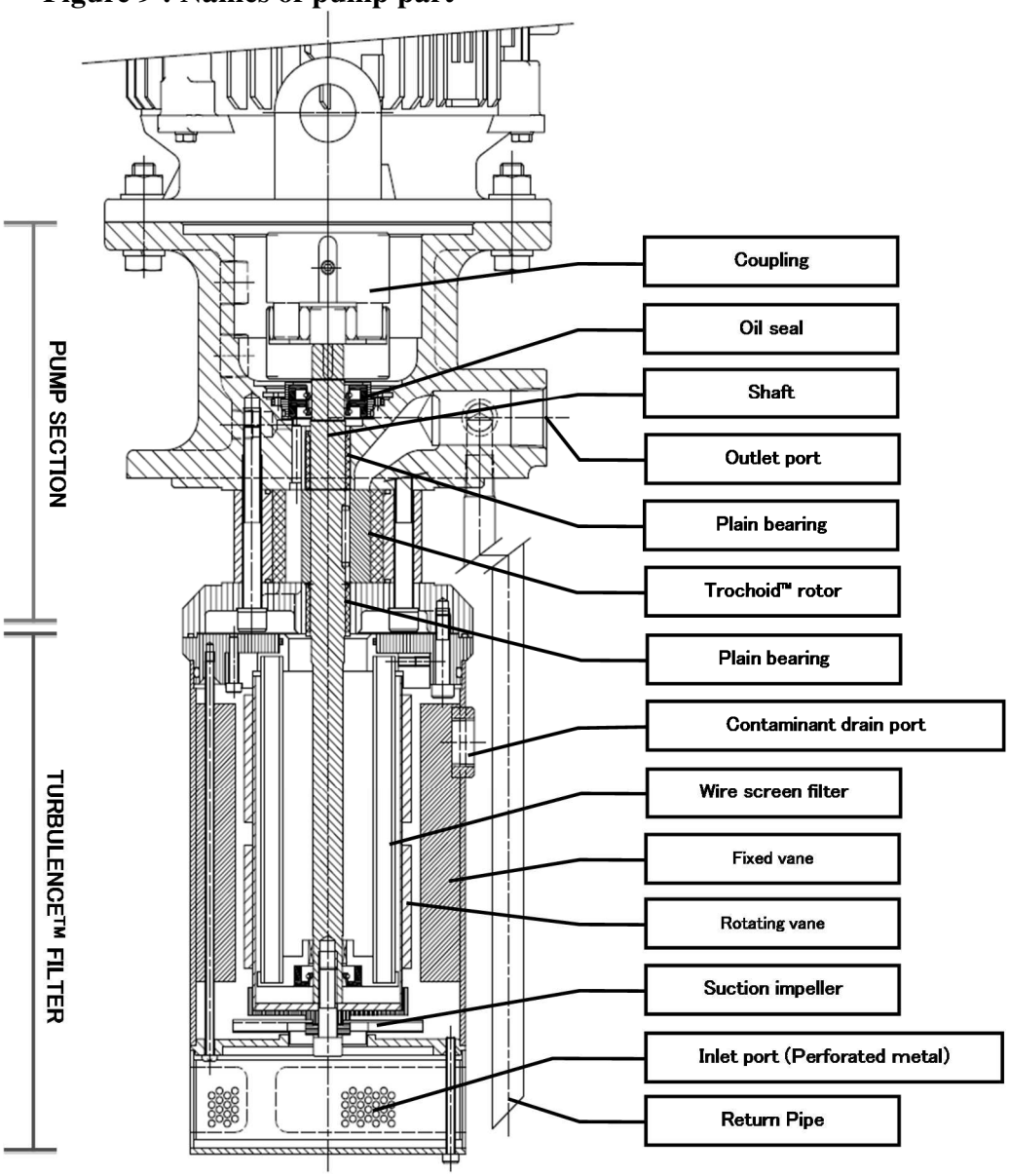

Troubleshooting guide

If you experience no oil discharge, a high pitched sound, or such other abnormal phenomena soon after the installation, check the troubleshooting chart in the table that follows.
If you cannot find out the cause of trouble, consult us or a dealer.

Table 4: Pump troubleshooting chart

Symptom	Possible causes	Check methods	Possible remedies
No discharge from outlet port. Insufficient flow or pressure. Abnormal noise.	Motor failure.	Are wires at motor loose or disconnected? Do operation test for motor individually.	・Repair or replace pump.
	Motor is wired incorrectly or disconnected.	Are wires at motor loose or disconnected? Check direction of rotation.	・Rewire motor in a correct rotation indicated on label.
	Coupling is damaged.	Check connected area between pump and motor.	・Replace coupling.
	Liquid surface level decreases.	Check liquid amount in tank.	・Add enough liquid. ・Control liquid level with level sensor.
	Inlet port is clogged.	Check the inlet port for clogging.	・Periodical cleaning on and around inlet port. ・Insert a plate filter prior to the inlet port as a pre-filtration.
	Turbulence filter is clogged.	・Does pump deliver liquid from contaminant drain port? ・Is there abnormal noise? ・Is there tramp oil?	・Perform backwashing. (See the steps on P22 ・Take measures to prevent suction of air or tramp oil.
	Air drawn into pump or pipes.	・On the first-run, after long term storage or immediately after replacing coolant liquid, pump often doesn't discharge due to the trapped air.	・Perform air-bleeding on pump or piping. Perform air-bleeding in front of check valve if the one is installed in outlet line.
	Pump failure or wear.	・Does motor rotate? ・Are viscosity and lubrication level adequate? ・Is there abnormal noise?	・ Repair or replace motor. ・ Change the types of coolant you use.
	Cavitation, aeration.	・Is pump sucking foam or air?	・Take measures to prevent suction of air or tramp oil. (ex. Change pump location, use partition or defoamer)
	Diameter of the pipe connected to outlet port is too large.	Is outlet discharge flow rate sufficient?	・Use smaller pipes.
	Relief valve pressure setting.	Does pressure build up when tightening the relief valve's adjust screw?	・Tighten up the relief valve's adjust screw to the required level.
	Relief valve fixing.	Does pressure not build up when tightening the relief valve's adjust screw?	・Repair or replace relief valve. ・Remove tramp oil.
No discharge from contaminant drain port	Contaminant drain port piping is too long or too high.	Pull off a pipe from the contaminant drain port and check if liquid is being delivered properly or not.	Piping must be no higher than 1 m from the tank bottom vertically, and no longer than 3 m horizontally.
	Clogging of contaminant drain port.	Check the clogged area.	・Clean inside the pipe periodically. ・Make piping layout with less bend. ・Use larger pipe.
	Clogging or failure of suction impeller.	Check the suction impeller for clogging or damage.	・Remove accumulated swarf. ・Repair or replace pump.
Liquid leaks.	Oil seal deterioration or damage.	Does liquid leak from near the coupling connected area?	Repair or replace pump.
	Packing deterioration or damage.	Does liquid leak from connected area?	Repair or replace pump.
Breaker or thermal trips out.	・Motor failure. ・Wiring errors.	・Check motor wiring. ・Does motor start?	・Rewire motor. ・Repair or replace motor.
	Overloading.	Are motor output rating and coolant viscosity adequate?	・Use motor with higher output rating. ・Use pump with lower capacity. ・Lower the pressure setting. ・Change the coolant types.

	Coolant type is incompatible. (Viscosity is too high, lubricity insufficient, Pump failure)	・Is motor rotating? ・Are liquid viscosity and lubricity adequate? ・Is there abnormal noise?	・Repair or replace pump. ・Change the types of coolant you use.

Backwashing

As described in the above Pump troubleshooting chart (See Table 4, P.21), if the pump discharge or intake rate is reduced, the turbulence filter is possibly clogged.
In that case, clogged filter can be cleaned by backwashing and filter performance will be restored. Follow the procedure shown below for backwashing.

Figure 10 : Backwashing Circuit

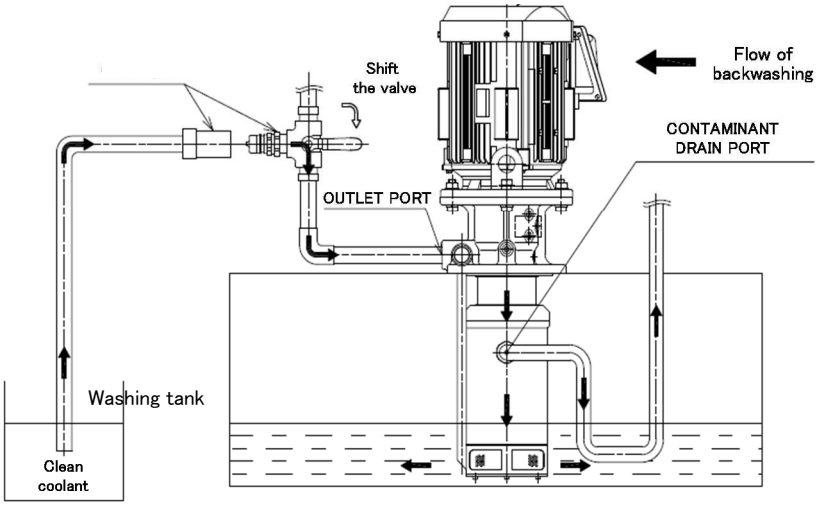

① Set up a washing tank and pour in some (guideline: 10 L) clean coolant.
② Turn the coupler toward the direction of washing tank.
③ Change connections between terminal U and V, and run the pump in reverse and let the pump suck the clean coolant from the washing tank for 5 seconds to backwash the filter.
④ After backwashing is completed, return the coupler toward the direction of machine tool.
⑤ Restore the original terminal connections and run the pump in the normal rotation.

⚠ **Caution:** Backwashing will not recover filtration performance of a pump completely. Constant filter clogging suggests the possibility of operating the pump beyond the specifications. In particular, be careful not to allow tramp oil and foam to be mixed in the coolant tank.

Nippon Oil Pump Co., Ltd.

Revision number: A1TE201805

For further information :

HP : http://www.nopgroup.com

Tel : +81-3-6402-4041
Fax : +81-3-3436-1777

Sumitomo Real Estate Higashi Shimbashi Building-6. 3F,1-2-4 Hamamatsucho, Minato-ku, Tokyo, Japan 105-0013

Your dealer :